Customer approval :

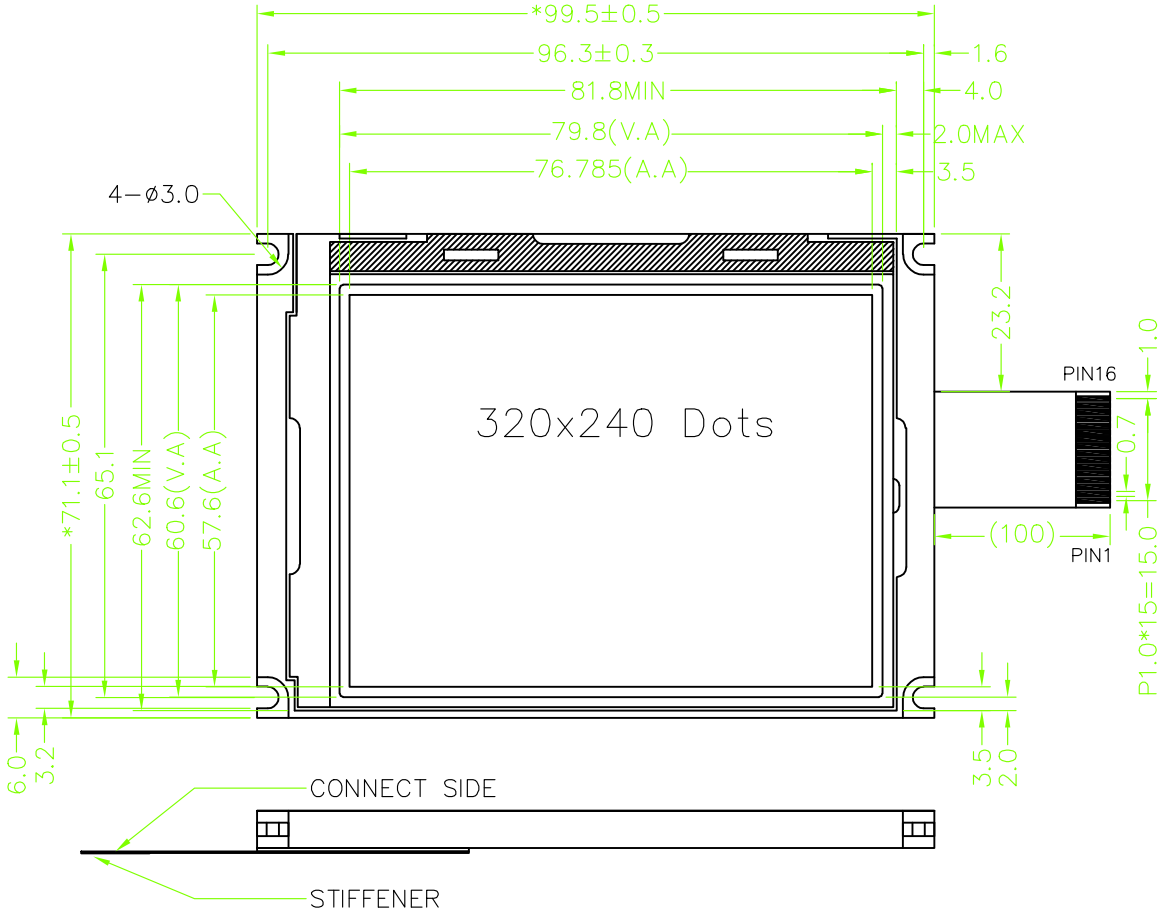

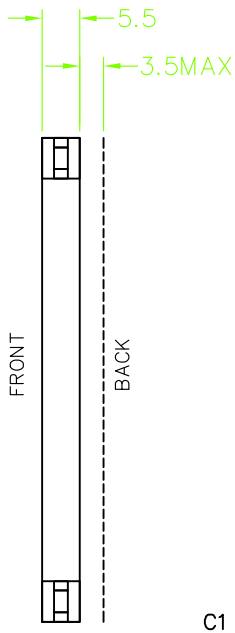

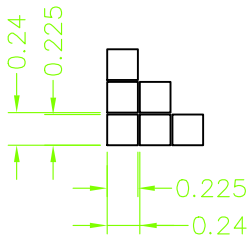

DOT SIZE
SCALE: 20:1

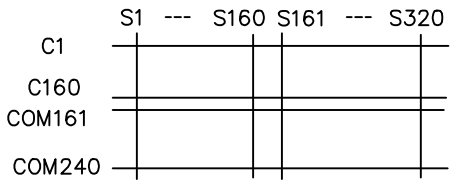

COM&SEG layout

SPECIFICATION:

1). Driving: Duty:1/240, Bias:1/12, VDD:3.3V
2). VIEWING DIRECTION: 6 O'CLOCK
3). Display mode: FSTN/Positive/Transflective
3). Operating temp.:-10°C~+60°C
4). Storage temp.: -20°C~+70°C
5). Control IC: Without
6). BACKLIGHT Color: White
7). DIMENSIONS WITH MARK "*" ARE IMPORTANT WITH MARK "()" ARE REFERENCED
8). All the raw materials are RoHS compliant

PIN	1	2	3	4	5	6	7	8	9	10	11	12	13	14	15	16
SYMBOL	Vout	V0	NC	VDD	VSS	D0	D1	D2	D3	/DOFF	LP	M	CP	FLM	BLA	BLK

REV	REVISION RECORD	DATE
A0	First issue	11-20

TCC®

深圳市三元晶科技有限公司
ShenZhen TCC LCD Hi-Tech Co,. Ltd

MODEL NO.	SYG320240LV10-3K3LN6-B4NZF-15		GENERAL TOL: ± 0.3
APPROVED BY	CHECKED BY	DRAWING BY	PAGE? / UNIT: mm
			PROJECTION